SOUTH HILL HOME

146 Dupont St·
Toronto, ON M5R 1V2

T 416.924.7224
E info@southhillhome.com







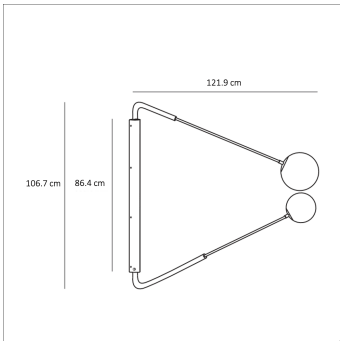

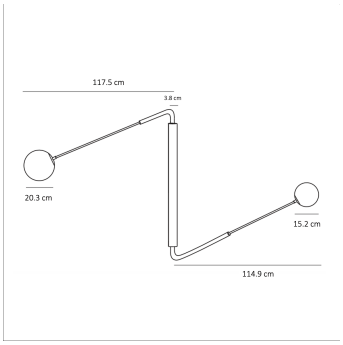

Images on this website are for reference only and may not accurately represent finishes, as appearance can vary depending on screen resolution, display settings, and print output.

Flutter Two Swing Arm Sconce

COLLECTION

PAUL MATTER

DESIGNER

NIKHIL PAUL

MATERIALS

Brass, Etched Glass

FINISHES

1. Aged brass with aged brass details
2. Burnt brass with burnt brass details
3. Raw brass with raw brass details

DIMENSIONS

Width: 91.5" (232.4cm)
Depth: 47.99" (121.9cm)
Height: 42.99" (109.2cm)

CUSTOMIZABLE

This product is customizable. Please contact us to find out more about this product.

ADDITIONAL DETAILS

Weight: 10 KGS

Lamping:
2 TYPE E12 Medium Base
3W – 5W LED, WARM WHITE
CE CERTIFIED, VOLTAGE 220V – 240V
Dimmable upon request

Custom Lengths:
Min. Length – 121.9 cm
Includes Up To – 160.0 cm